Counter-intuitive properties of a simple quantum engine

Thiago R. de Oliveira and Daniel Jonathan
Instituto de Física, Universidade Federal Fluminense, Niterói, Brazil

Abstract

- Quantum Otto Cycle with single spin-1/2 has the same properties of the classical Otto Cycle
- Quantum Otto Cycle with two coupled spins-1/2 has efficiency gain that in many previous works has been related to quantum correlations
- We show that
  - Efficiency gain is due to the energy level structure: the fact that one level does not couple to the external work source
  - Efficiency gain happens when the energy flux in this level is from the cold to the hot bath
  - The engine may operate even when we exchange the hot and cold bath role
  - The engine may cease to operate if the cold (hot) bath become to cold (hot)
  - Efficiency may increase when bath T difference decreases

Ideal Gas Otto Cycle

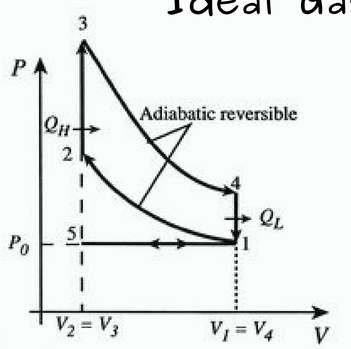

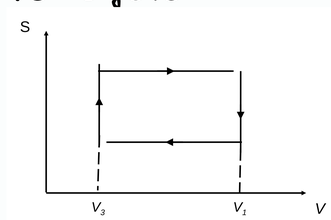

$\eta = 1 - (1/r^{\gamma-1})$, $r = V_1 / V_3$

- Engine: $T_3 > T_2 = T_1 r^{\gamma-1}$
- Ref. $T_2 > T_3 > T_1$
- Acc : $T_1 > T_3$

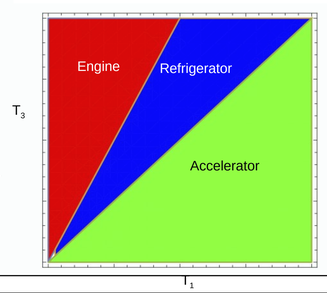

Quantum Adiabatic

Aproach a magnet: W>0

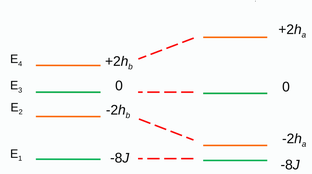

For J>0 system is out of equilibrium

Single Spin-1/2 Otto Cycle

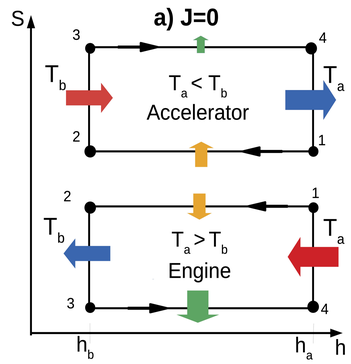

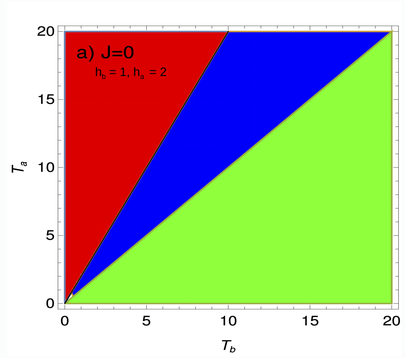

Coupled Spins Otto Cycle

$$H = 2J\,\vec{\sigma_1}\vec{\sigma_2} + h(\sigma_1^z + \sigma_2^z) - 2J$$

- Level $-8J$ does not vary with external field and does not contribute to work

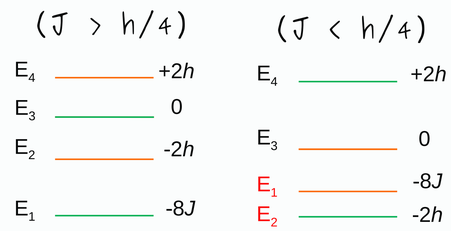

Heat Flow and Efficiency

- Interpret heat as the sum of heat exchanged with each llvel

$$Q_a = \sum_n E_n^a \Delta p_n;$$

$$Q_a = -8J\Delta p_1 - 2h_a\Delta p_2 + 2h_a\Delta p_4$$

$$\eta = \eta_0(1 - 8J\Delta p_1/Q_a)$$

- Increase in eff is due to the flux via the $-8J$ level being from the cold to the hot bath

Counter Intuitive Properties

- Can operate in both directions in the Sxh diagram: $T_a > T_b$ or $T_a < T_b$

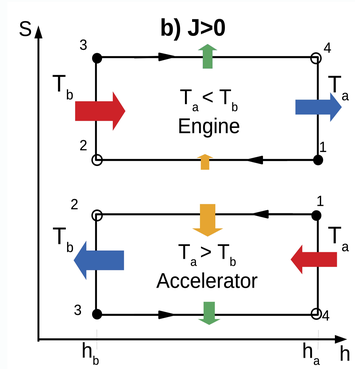

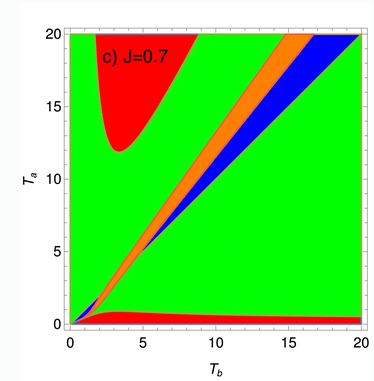

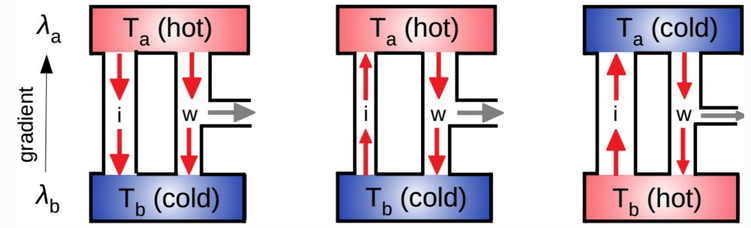

- Efficiency can increase with decrease in bath T difference
- Effects also valid in more general models
- Efficiency can be boosted further if the hot bath is replaced by a quantum measurement [4]
- Effects robust to non-adiabaticity [3]

References

[1] TRO, DJ, PRE 104, 044133(2021)
[2] G. Thomas and R. S. Johal, PRE 83 031135 (2011)
[3] C. Cherubim, TRO, DJ, PRE 105, 044120 (2022)
[4]MF Anka, TRO, DJ, PRE 104, 054128(2021)
Contact: troliveira@id.uff.br